BODY, CARGO BOX - Z26S4D92AN/AH/BN/BH (C750456)

2026 RZR - RZR PRO S4 ULTIMATE (R01) - Z26S4D92AN/AH/BN/BH

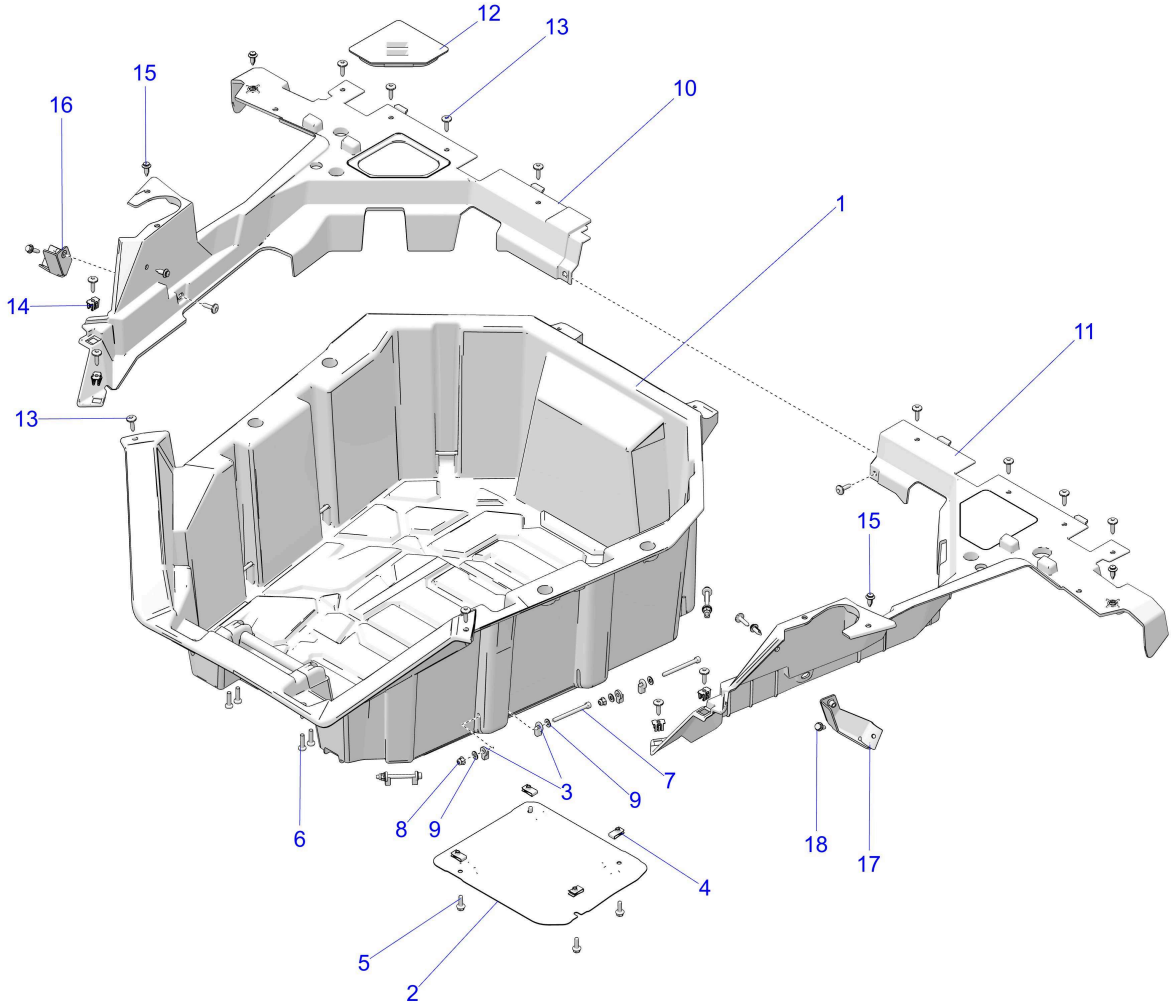

© 2024 Polaris Industries Inc.

C750456

Reference #	*Part#*	*Description*	*Quantity*
1	2639550	ASM-BOX,CARGO [INCL. 2-9]	1
2	5266247	SHIELD-TUB	2
3	5417208	SEAL-CARGO BOX	16
4	7081305	CLIP-U SPEED NUT	4
5	7516822	SCREW-M6X1.0X20-HX/FL-Y/D	4
6	7518158	SCR-#14X1 HI/LO-PH-PN TRX-M	4
7	7521340	SCR-M6X1.0X70MM SOC/CAP-ZINC	8
8	7548027	NUT-HXFL-M6X1.0 8 ZTB NYL	8
9	7558203	WASHER-.250X.563X.047 WRGHT-Y	16
10	5466201-070	PANEL-SURROUND,CARGO BOX,LH,BL	1
11	5466202-070	PANEL-SURROUND,CARGO BOX,RH,BL	1
12	5416900	PANEL-ACCESS,COOLANT BOTTLE	1
13	7519650	SCR-TXTH-M6X1.0X25 ZFB	13
14	7081304	CLIP, EXPANSION, 6MM	4
15	7661855	RIVET-TUFLOK,.315-.325X.787	6
16	5267256	BRKT-MNT,BED SUPPORT,LH	1
17	5267257	BRKT-MNT,BED SUPPORT,RH	1
18	7518529	SCR-M6X1.0X20,HXHD,FLG,TDFM,BK	2

Copyright 1996-2026 Polaris Industries U.S.A All rights reserved.